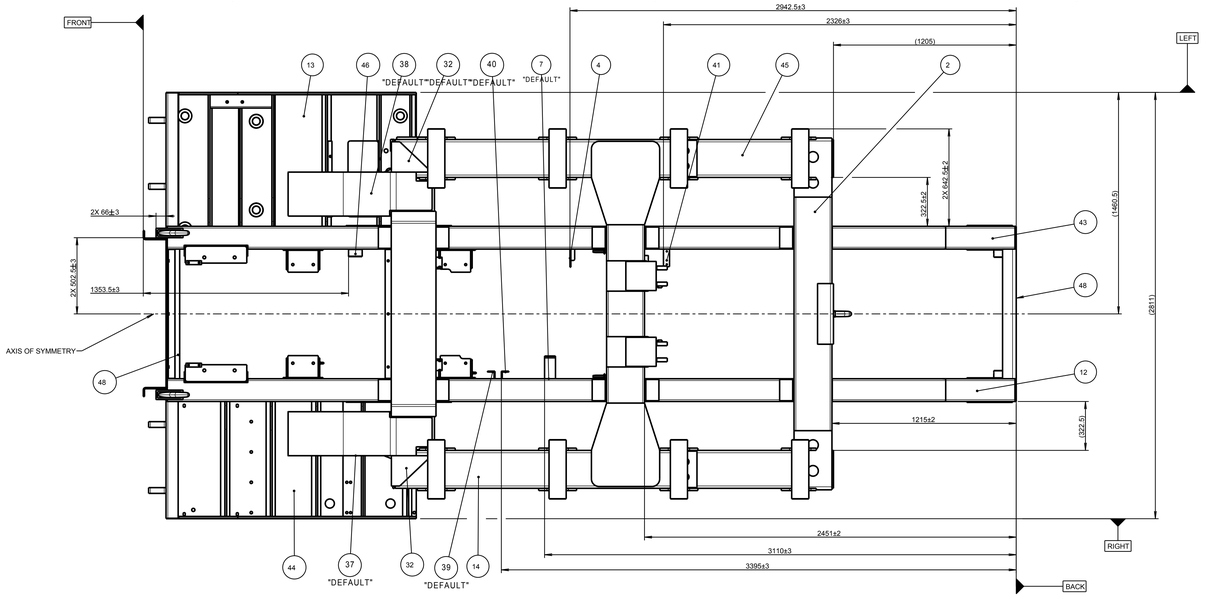

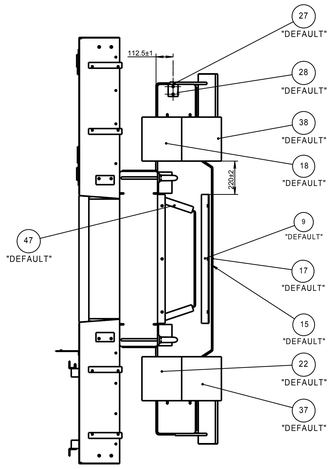

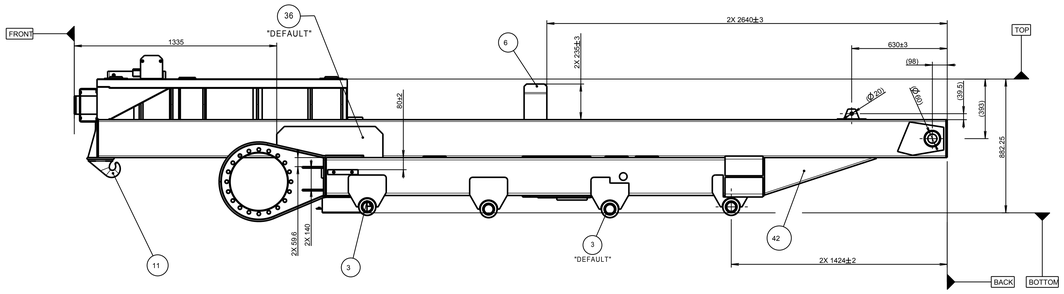

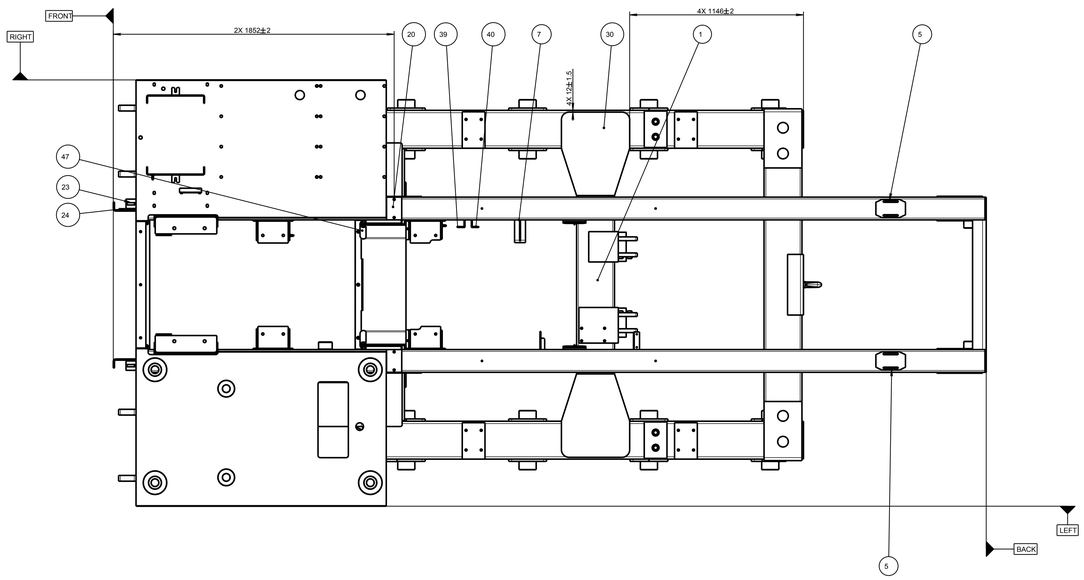

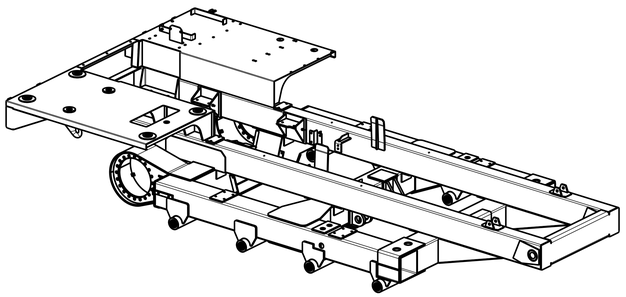

3D VIEW
SCALE 1:20

1. BUSHING "3" IS MOUNTED BY USING OF ADEQUATE TOOLS AND FORCE

ITEM	PART NAME	PART NUMBER - NORM - PRODUCT NUMBER	QTY.
48	U-PROFILE	CHP00010	2
47	TUBE	CHP00090	2
46	SQUARE TUBE	CHP00021	1
45	RIGHT SIDE SUPPORT	CHA00006	1
44	RIGHT PLATFORM	CHA00019	1
43	RIGHT BEAM	CHA00039	1
42	REINFORCEMENT	CHP00040	2
41	PROFILE L	CHP00028	1
40	PROFILE L	CHP00020	1
39	PROFILE L	CHP00019	1
38	PLATE	CHP00127	1
37	PLATE	CHP00126	1
36	PLATE	CHP00124	2
35	PLATE	CHP00123	2
34	PLATE	CHP00122	2
33	PLATE	CHP00121	2
32	PLATE	CHP00120	2
31	PLATE	CHP00116	10
30	PLATE	CHP00115	4
29	PLATE	CHP00109	4
28	PLATE	CHP00097	1
27	PLATE	CHP00096	1
26	PLATE	CHP00095	4
25	PLATE	CHP00092	12
24	PLATE	CHP00087	2
23	PLATE	CHP00086	2
22	PLATE	CHP00058	1
21	PLATE	CHP00057	1
20	PLATE	CHP00044	2
19	PLATE	CHP00043	2
18	PLATE	CHP00035	1
17	PLATE	CHP00034	1
16	PLATE	CHP00033	1
15	PLATE	CHP00032	1
14	LEFT SIDE SUPPORT	CHA00007	1
13	LEFT PLATFORM	CHA00029	1
12	LEFT BEAM	CHA00040	1
11	HOOK	CHP00093	2
10	HOLDER	CHA00027	2
9	HOLDER	CHA00024	2
8	HOLDER	CHA00022	1
7	HOLDER	CHA00012	1
6	HOLDER	CHA00002	2
5	CONSOLE	CHA00011	2
4	CONSOLE	CHA00004	1
3	BUSHING	BUSHING	16
2	BUMPER	CHA00010	1
1	BEAM	CHA00038	1

METHOD OF PROJECTION	SCALE 7:100	SYMBOL / REVISION / DATE / SIGNATURE	
PROJECT	CHASSIS		
GENERAL TOL	ISO 9692-2		
MATERIAL 1	SEE DETAILS		
MATERIAL 2	MATERIAL 3		
MASS	2193.46 kg		
DESIGNER	ING. KAROL RAFFAY		
PARENT ASSEMBLY			
FORMAT	A0	DATE	09-09-2013

CEHY - DUMPER

PARTNAME
CHASSIS - MAIN ASSEMBLY

PARTNUMBER
CHA00001

SHEET NO. 1 / NO. OF SHEETS 3

A0

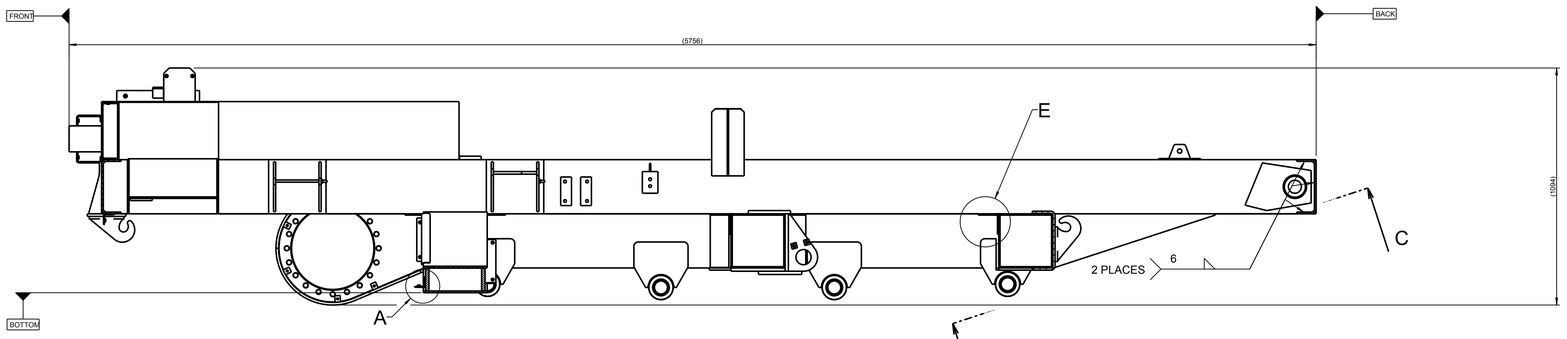

XSEC A-A

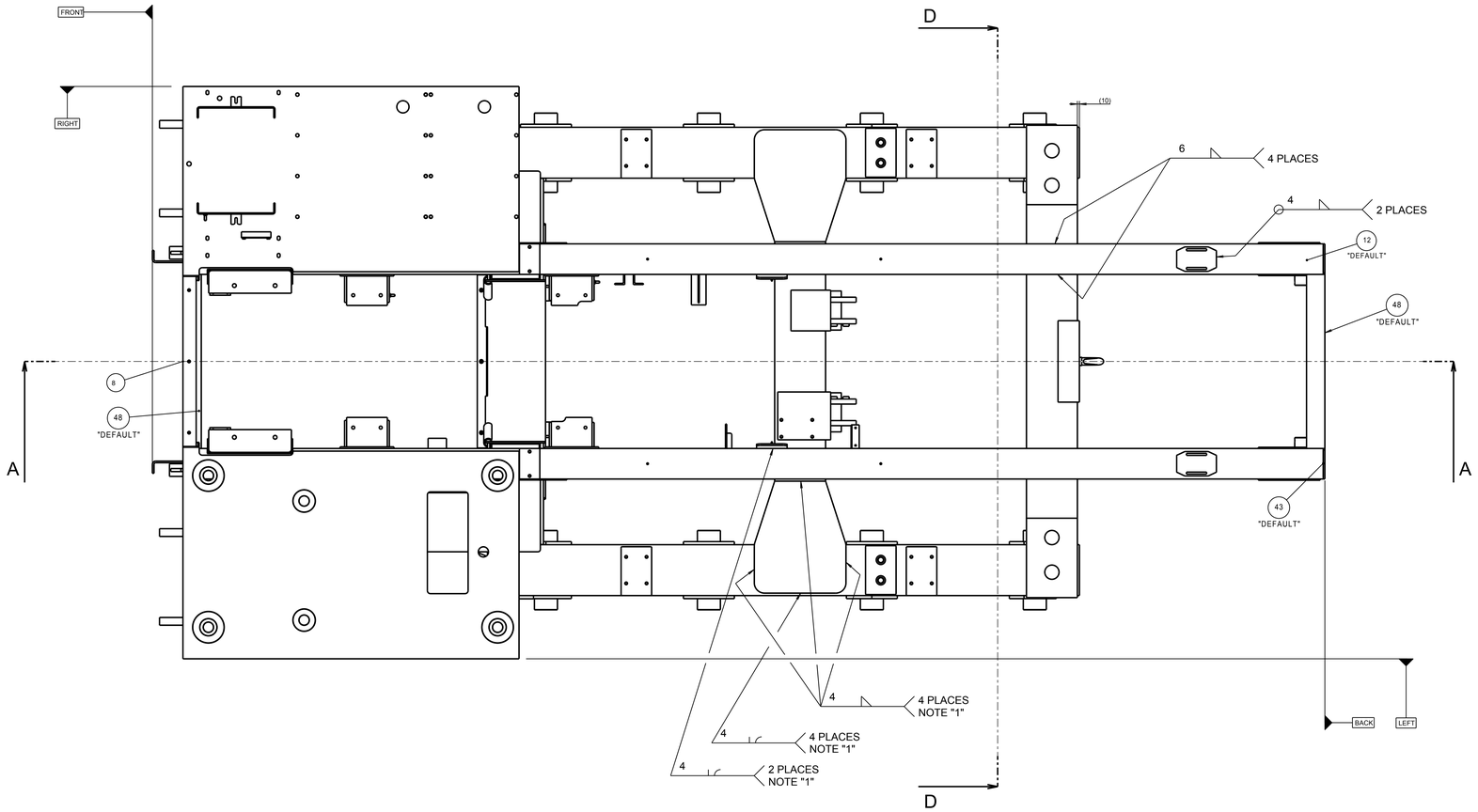

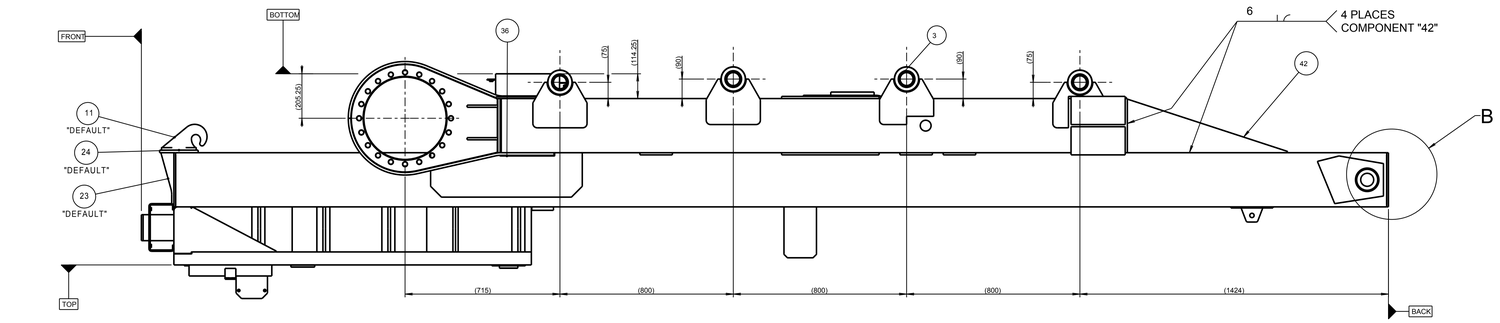

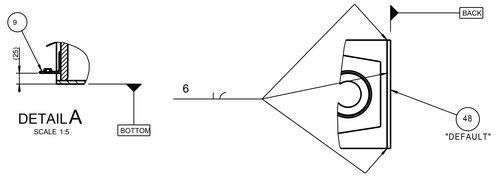

DETAIL A
SCALE 1:5

DETAIL B
SCALE 1:5
4 PLACES

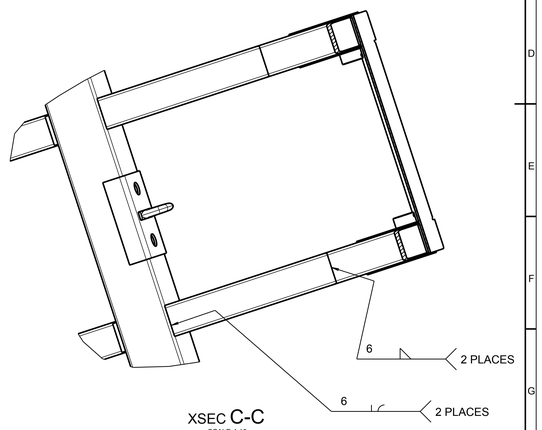

XSEC C-C
SCALE 1:10

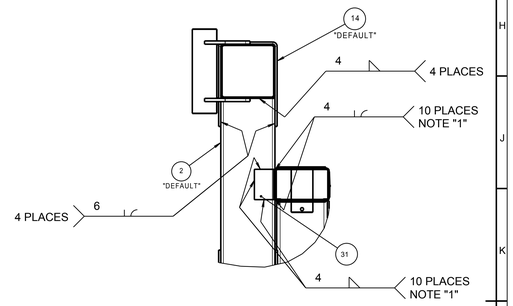

XSEC D-D
SCALE 1:10

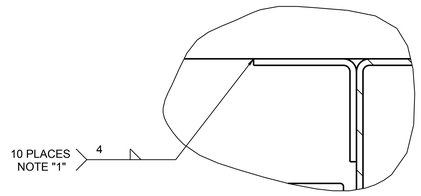

DETAIL E
SCALE 1:2

WELD 4. - 6
WELD 3. - 6
WELD 2. - 4
WELD 1. - 4
WELDING PROCESS SHEET 1.

6. COMPONENTS 7, 8, 11, 39, 40, 43 & 48 ARE WELDED TO CONSTRUCTION BY WELD 1. RESPECTIVELY BY WELD 2. WHERE IS POSSIBLE
5. COMPONENTS 9, 13, 15, 16, 17, 18, 21, 22, 26, 27, 28, 32, 33, 34, 35, 36, 37, 38, 45 & 47 ARE WELDED TOCONSTRUCTION BY WELD 3. RESPECTIVELY BY WELD 4 WHERE IS POSSIBLE
4. COMPONENTS 12, 14, 20 & 44 ARE WELDED TO CONSTRUCTION BY WELD 1. RESPECTIVELY BY WELD 3. WHERE IS POSSIBLE
3. COMPONENTS 10, 23 & 24 ARE WELDED TO CONSTRUCTION BY WELD 2. WHERE IS POSSIBLE
2. WELD IS MADE AROUND OF THE OUTER EDGES OF COMPONENT "21"
1. WELD WHERE IS POSSIBLE

METHOD OF PROJECTION	SCALE 1:10	SYMBOL / REVISION / DATE / SIGNATURE	
PROJECT	CHASSIS		CEHY - DUMPER
GENERAL TOL	ISO 9692-2		
MATERIAL 1	SEE DETAILS		
MATERIAL 2	MATERIAL 3		
MASS	2193.46 kg	PARTNAME	CHASSIS - MAIN ASSEMBLY
DESIGNER	ING. KAROL RAFFAY		
PARENT ASSEMBLY		PARTNUMBER	CHA00001
FORMAT	A0	DATE 29-10-2013	SHEET NO. 2 / NO. OF SHEETS 3

A0

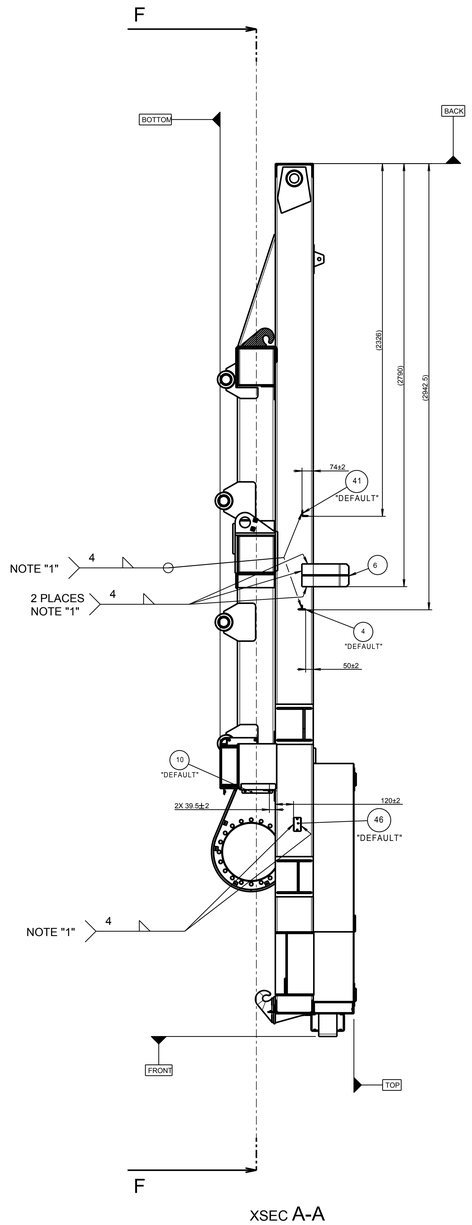

XSEC A-A

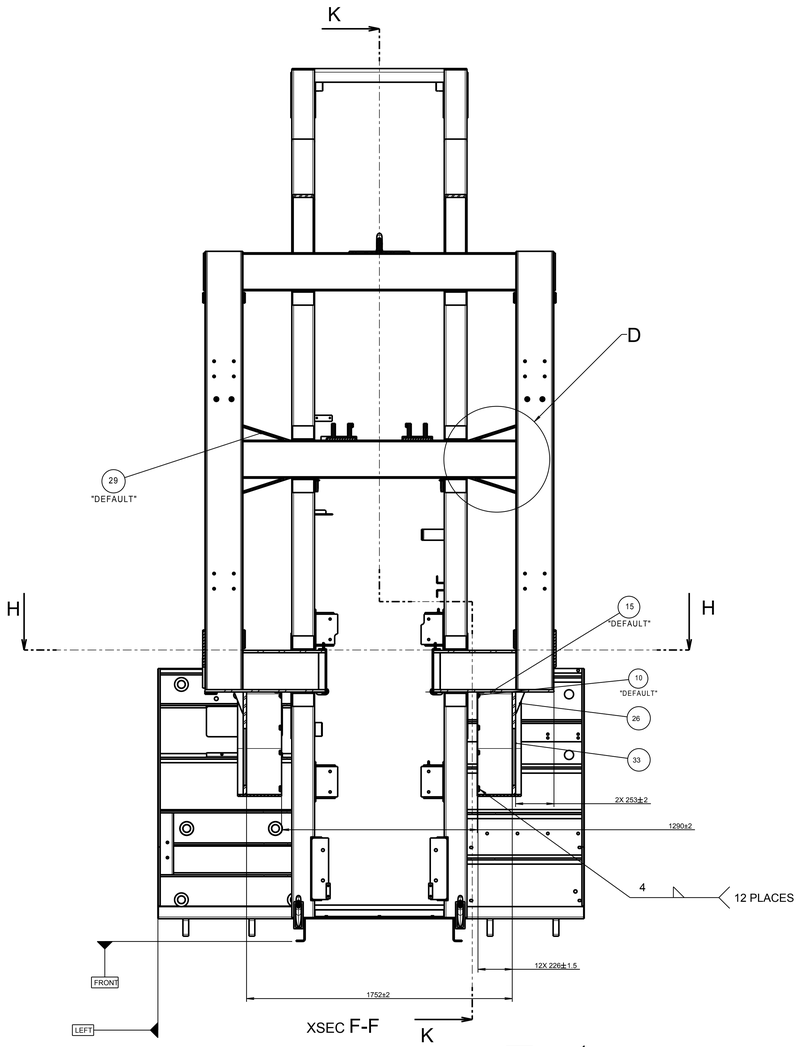

XSEC F-F

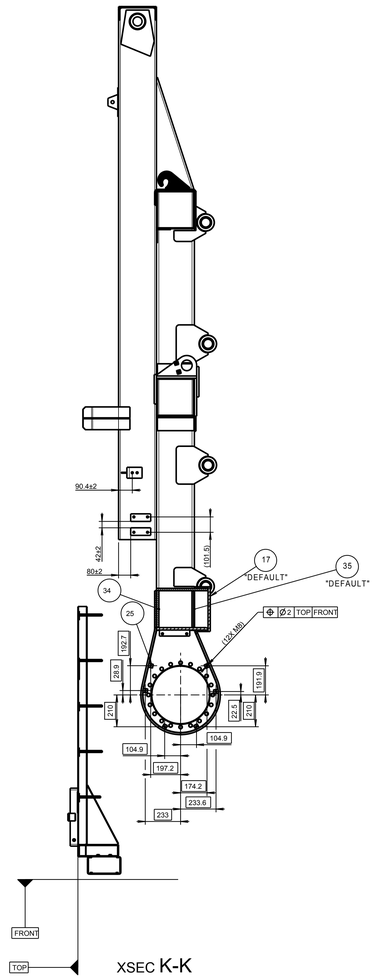

XSEC K-K

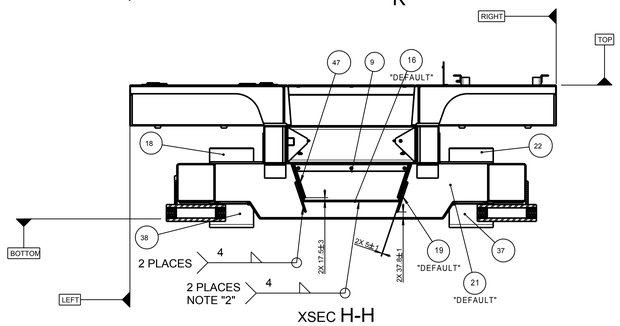

XSEC H-H

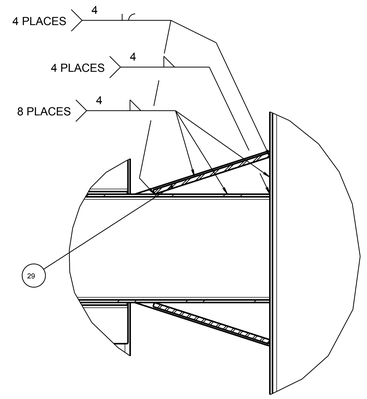

DETAIL D
SCALE 1:5

WELDING PROCESS SHEET 2.

METHOD OF PROJECTION		SCALE	7:100
PROJECT	CHASSIS		
GENERAL TOL	ISO 9692-2		
MATERIAL 1	SEE DETAILS		
MATERIAL 2		MATERIAL 3	
MASS	2193.46 kg		
DESIGNER	ING. KAROL RAFFAY		
PARENT ASSEMBLY			
FORMAT	A0	DATE	29-10-2013

SYMBOL	REVISION	DATE	SIGNATURE

CEHY - DUMPER

PARTNAME: CHASSIS - MAIN ASSEMBLY

PARTNUMBER: CHA00001

SHEET NO.	NO. OF SHEETS
3	3

A0